PAY ATTENTION:

SILK SCREEN PRINT THE LOGO ATEX

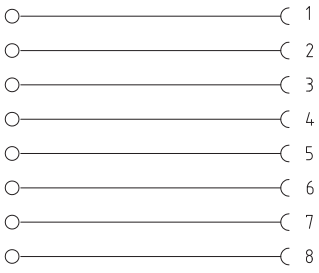

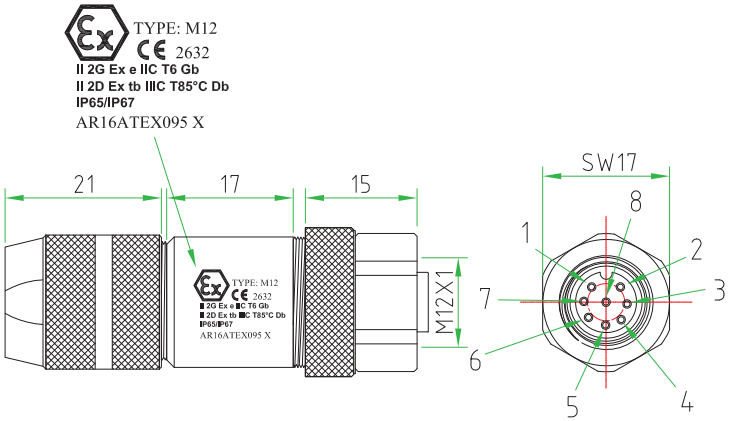

CONNECTOR FEATURES	
PRODUCT TYPE	M12 A-CODED FIELD ATTACHABLE
CONTACT TYPE	FEMALE
NUMBER OF CONTACTS	8 POLES
HOUSING TYPE	180°
RATED VOLTAGE	30V AC/DC
RATED CURRENT	2A
COUPLING NUT MATERIAL	Brass+nickel plated (CuZnNi)
HOUSING MATERIAL	Brass+nickel plated (CuZnNi)
INTERNAL CORE MATERIAL	PA66 - CM3004V0
O"RING	NBR
PROTECTION CLASS	IP5/IP67
CONNECTOR WITH H.T.P.LOGO	

THIS CODE IS SPECIAL BECAUSE IS THE ATEX CONNECTORS MAIN REFERENCE NORM:ATEX2014/34/EU MATERIAL PA66 - CM3004V0 (Material:V0 UL/CSA), FOR ALL COMPONENT OF THE CONNECTOR

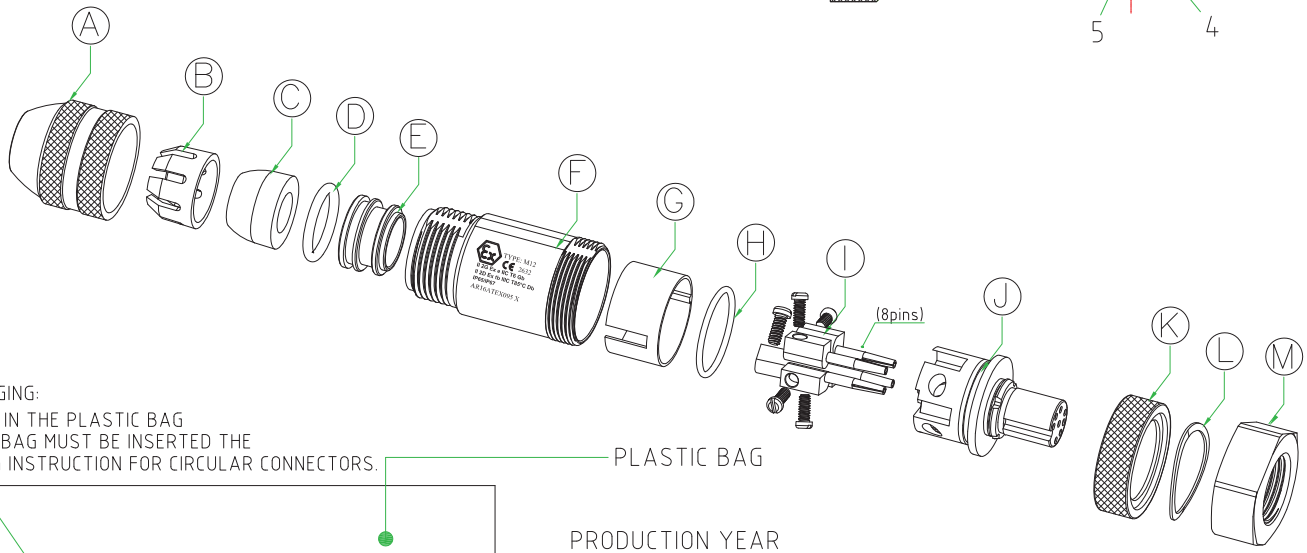

A	PRESS CABLE SREW
B	LAMELLAE PRESS-CABLE SEAL
C	GASKET PRESS-CABLE SEAL
D	O-RING
E	METAL HOLDER TO FIX THE SHIELD
F	HOUSING BRASS NICKEL PLATED
G	PLASTIC PROTECTION
H	O-RING
I	SCREW CONTACT GOLD PLATED
J	INTERNAL CORE M12 A-CODED
K	NUT FOR HOUSING BRASS NICKEL PLATED
L	METAL O-RING
M	M12 NUT BRASS NICKEL PLATED

PACKAGING:
SINGLY PACKED IN THE PLASTIC BAG
IN THE PLASTIC BAG MUST BE INSERTED THE
NEW OPERATING INSTRUCTION FOR CIRCULAR CONNECTORS.

PLASTIC BAG

PRODUCTION YEAR
EXAMPLE: 2016
2017
2018...

H.T.P. S.r.l.
I-24030 - BREMBATE DI SOPRA(BG)
CODE: 12F18000-ATEX YEAR:20##
M12 METAL HOUSING MADE IN CHINA
5######

H.T.P.PRODUCTION CODE

CE 2632 Ex
II 2G Ex e IIC T6 Gb
II 2D Ex tb IIIC T85°C Db IP65/67
AR16ATEX095 X

WHITE LABEL

TOLLERANZE	±0.2	DISEGNATORE ROBERTO SUGLIANI	DATA 04.03.2019	SCALA 1:1		DISEGNO 1/2
U.d.M	ANGOLO	CONTROLLATO				
DESCRIZIONE M12 FEMALE STRAIGHT 180°,8POLES, FIELD ATTACHABLE METAL HOUSING. CONNECTOR MAIN REFERENCE NORM ATEX2014/34/EU			TIPO M12			MATERIALE
High Tech Products HTP	H.T.P. HIGH TECH PRODUCTS		CODICE 12F18000-ATEX			